VINO MASTER
WINE STORAGE SOLUTIONS

INSTALLATION & USER GUIDE

Wine Master SP40DU

Wine Master SP40DU must be installed by F-gas registered company

Engineer name:.....

Company name:.....

Unit serial number:.....

Installation date:.....

Vino Master Division of Elextric
Kemp House 152-160 City Road,
London, EC1V 2NX
Tel: 020 32868525
E-mail: info@vinomaster.co.uk
www.vinomaster.co.uk
We reserve the right to change product specifications and prices without prior notice. Vino Master Division of Elextric does not accept any responsibility for any loss, which may arise as a consequence of reliance on information contained in this user guide

GB

User manual
Table of contents

1. TECHNICAL DATAS 5
2. EQUIPMENT 7
2.1. Outside unit 7
2.2. Inside unit 7
2.3. Thermostat 7
2.4. Connection box 7
2.5. Connection drawing 7
2.6. Cellar insulation 8
2.6.1. Insulation of walls, ceiling and floor 9
2.6.2. The door 9
2.6.3. Insulation of other elements 9
3. INSTALLATION OF THE AIR CONDITIONER WINEMASTER® 10
3.1. List of required material **10**
3.2. Installation of the outside unit **10**
3.2.1. Brackets installation 10
3.2.2. Fixing the outside unit 10
3.3. Installation of the inside unit **11**
3.4. Ducting connection **11**
3.5. Electric connection **12**
3.5.1. Connection of outside unit 12
3.5.2. Connection of inside unit 12
3.5.3. Plugging 12
3.5.4. Wiring drawing 13
3.6. Installation of the water drain system **14**
4. PLUGGING THE AIR CONDITIONER WINEMASTER® 14
4.1. Connecting the air conditioner **14**
4.2. Start up **15**
4.2.1. Temperature setting 15
4.2.2. Standby mode 15
4.2.3. Automatic defrost 15
5. MAINTENANCE OF THE AIR CONDITIONER WINEMASTER® 16
5.1. Filter and outside unit cleaning **16**
5.2. Condensates drain **16**
6. WARRANTY 17
6.1. Legal warranty **17**
6.2. 2 years contractual warranty **17**
6.3. Warranty conditions **17**
6.4. Exclusions and limitations of warranty **17**

The warranty of this Wine Master SP40DU is guaranteed only if the unit is connected to a legal standard protective (earthing system), wired according to the wiring regulation BS 7671 and the installation where the unit connected to is inspected according to BS 7671. It is a fundamental requirement for safety. Verify this condition and if in doubt have the electrical installation checked by a qualified electrician or approved electrical contractor.

Do not make connections via extension cables or multi-plugs.

1. TECHNICAL DATAS

	WINESP40CAPRO	
	Outside unit	Inside unit
Weight of units	35 kg	17 kg
Dimensions H x L x D	408 x 633 x 415	262 x 517 x 327
Temperature setting	Preset at 13°C, adjustable between 13 & 15°C *	
Maximum outside temperature.	29°C **	
Cooling power	900 W at 13°C **	
Electricity supply	230/240V-50 Hz	
Electric power	600 W	
Heating power	500 W	
Gas	R404A	

Electrical connection: system must be hard wired to FCU 5Amp fused,

***** The insulation has to be in accordance with the volume of the cellar and the set temperature**.**

****** The cooling performance is dependant from the outside temperature. Therefore, the set temperature of 13°C for the cellar cannot be maintained if the outside temperature reaches the 29°C. If the thermal safety functions to often, there is a risk for the compressor to be damaged. In all cases, it must be avoid that the outside **temperature remains at 30°C**, this high temperature should be limited to the summer period.

VENTILATED COLD OR « NO FROST » (schematic diagram)

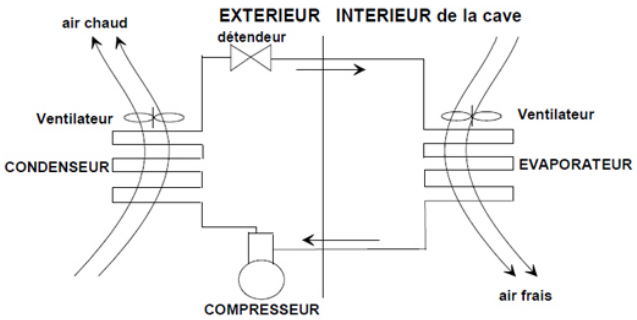

The advantages of « ventilated cold »:

- No frost other than on the evaporator.
- Automatic defrosting and maximized refrigeration efficiency.
- Cold distribution improved by a permanent air circulation (without air stratification).

The circulation of air allows maintaining the pre-selected temperature throughout the cellar

Technical drawing

- Outside unit

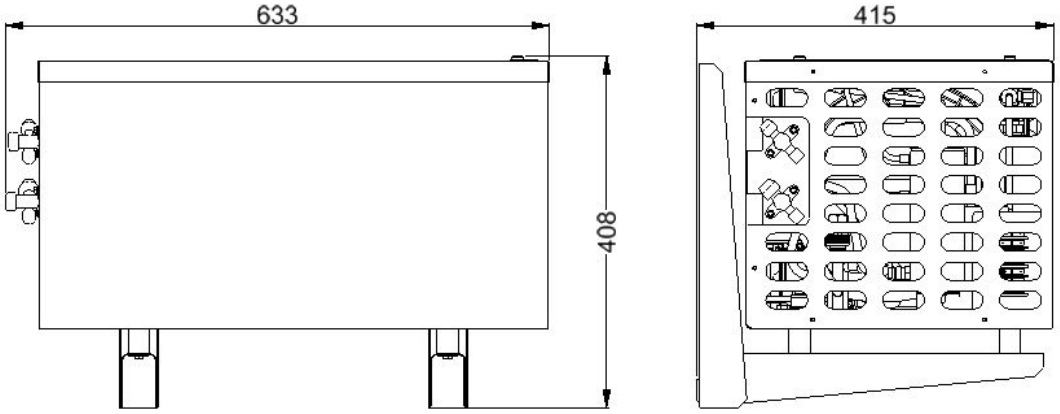

- Inside unit

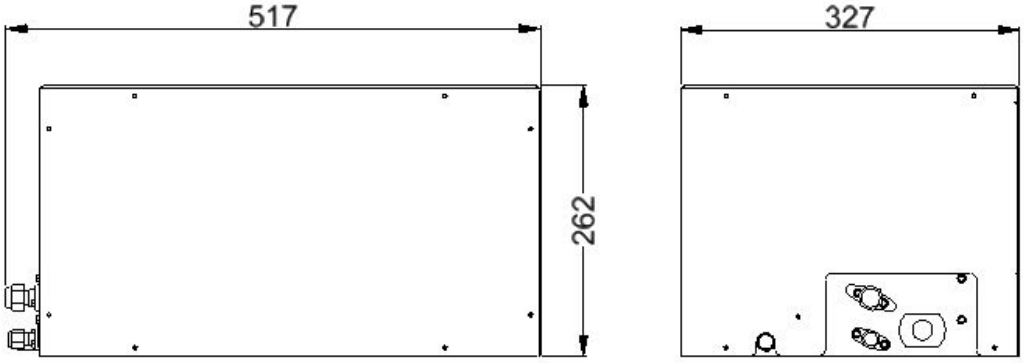

- Thermostat

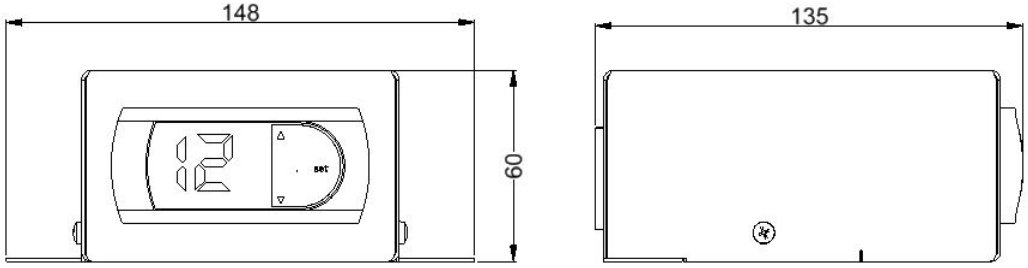

- Wiring box

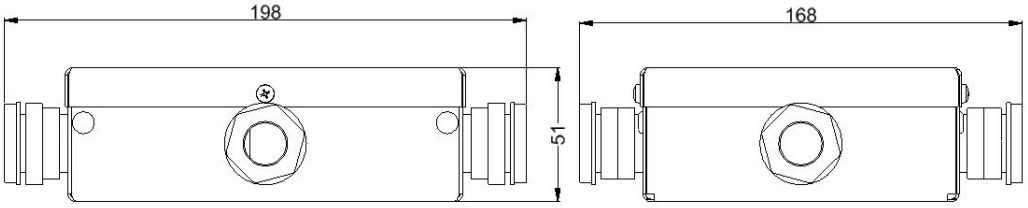

2. EQUIPMENT

The air conditioner is composed of 2 separate units, of a thermostat and a wiring box. They must be connected by frigorific ducting pipes and electric connections.
The ducting pipes length between both units **should not exceed 20m.**

2.1. Outside unit

The unit must be installed outside or in a room.

If the unit is installed outside:

- Place the unit in order the air suction and air rejection are not disturbed
- Encourage the installation in open areas and sheltered from the sun
- Be cautious to the noise to the neighborhood
- Raise the unit to prevent from accumulation of water and snow

If the unit is installed in a room :

- Place the unit in order the air suction and air rejection are not disturbed
- Ensure there is a good ventilation
- Maximum temperature and non permanent≤ 40°C
- Ideal temperature ≈ 20°C.

2.2. Inside unit

Install the inside unit only inside the cellar.

2.3. Thermostat

The thermostat can be installed either inside or outside the cellar.
If installed outside, take into consideration the length of the temperature probe to be installed into the cellar.
The delivered probe has a length of 1.5m. It can be extended by flexible cable isolated to 2 drivers of minimal section of 0.5mm2.

2.4. Connection box

The connection box can be installed too either inside or outside the cellar.
If installed outside, take into consideration the cable length (2 m)

2.5. Connection drawing

TAKE INTO CONSIDERATION THE CABLE LENGTHS BETWEEN THE CONNECTION BOX AND THE UNITS

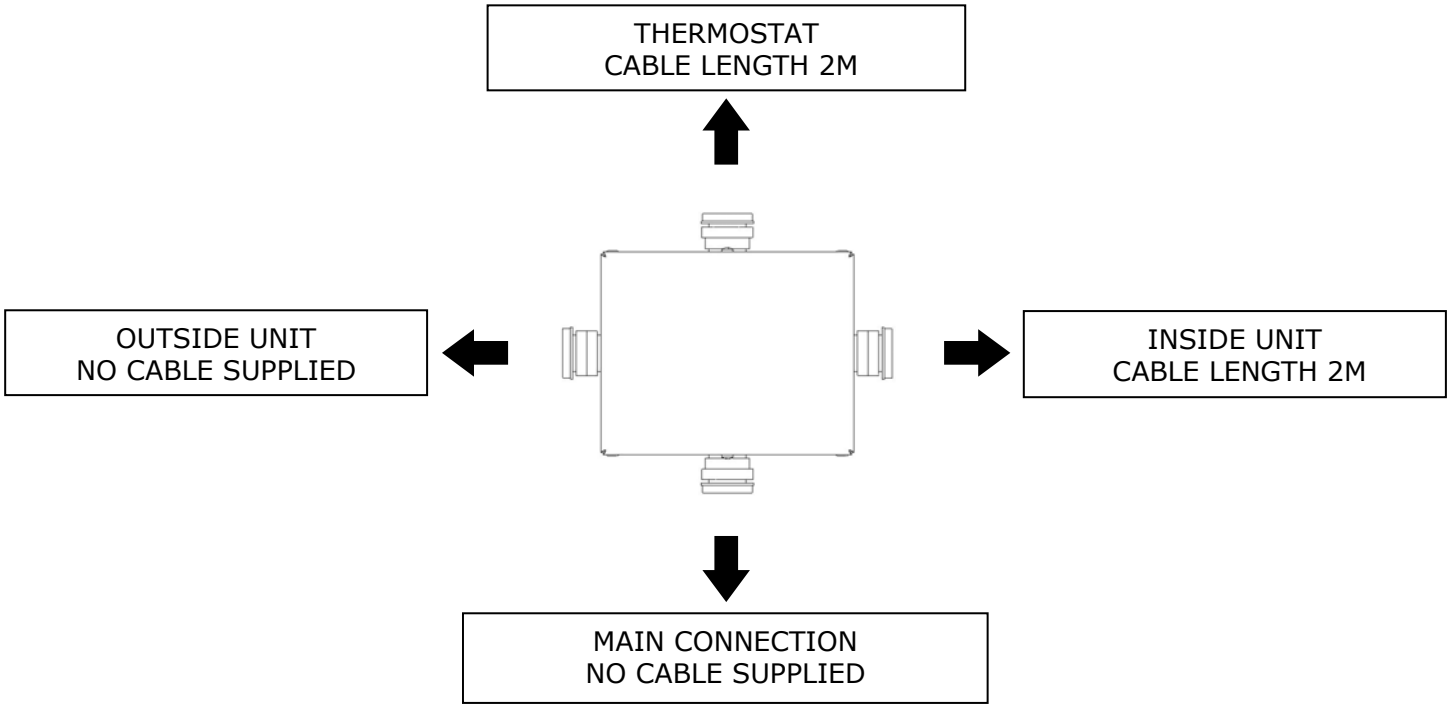

2.6. Cellar insulation

Insulation is essential for an efficient functioning of the WINEMASTER®. An appropriate insulation enables to maintain a stable **temperature and humidity level**. The chart on the next page will allow you to determine the type and thickness of insulation needed in relation to the exterior volume of the cellar and the model of the WINEMASTER®, for an inside temperature of 13°C.

Insulation complement

The insulating elements should be preferably installed:

- By "tongue and groove " panels or
- By fused together panels

→ **IMPORTANT : Avoid heat and humidity intrusion which can alter their regulation**

View

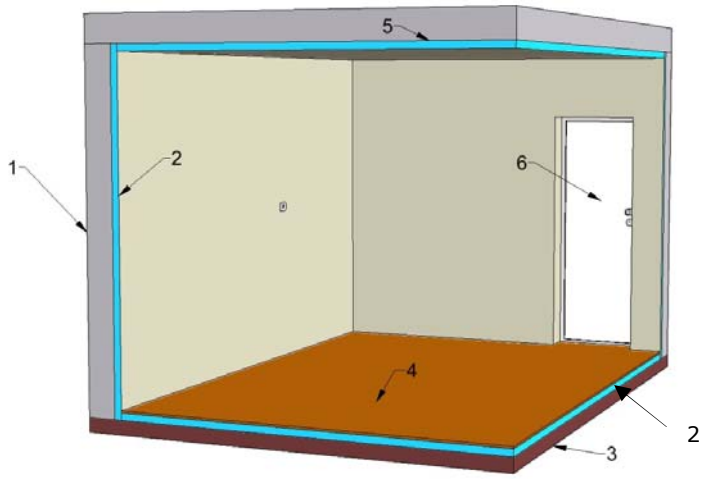

1. WALL
2. INSULATION MATERIAL
3. GROUND LEVEL
4. FLOOR
5. CEILING
6. INSULATED DOOR

IMPORTANT

The WINEMASTER® warranty is only valid if the insulation is in compliance with the board « Insulation selection » requirements for the whole cellar (walls, floor, door and ceiling) with perfect continuity of insulation.

Insulation selection

Volume of the cellar (m³)	Polystyrene expanded = 0,044 W/m°C (mm)	Polystyrene extruded = 0,030 W/m°C (mm)	Polyurethane foam = 0,025 W/m°C (mm)
4	20	10	10
8	30	20	20
12	50	30	30
16	60	40	40
20	80	50	50
24	90	60	50
28	100	70	60
32	120	80	70
36	140	90	80
40	150	100	90

2.6.1. Insulation of walls, ceiling and floor

Type of insulation panels

You can select among the following type of panels:

- Usual panels,
- « Complex panels »: insulation is covered with a with a cover material (plaster, mineral …..)
- « Sandwich panels »: insulation is covered on each side with a wooden panel or plaster board.

Important: The covering of the panels **protects the insulation against damage and guarantees its longevity. Avoid using mineral fibres insulation** (glasswool, rockwool, etc…) as they may accumulate moisture and lose their insulation power and avoid also thin film insulation that are not effective for cold.

DO YOU KNOW THAT ?

Some insulating materials are damaged by rodents. If necessary, cover the insulation with a protective lining on the inside of the cellar to avoid presence of mouse or rats.

→ **Polyurethane is an insulator that, due to its chemical composition, is not attacked by the rodents.**

Floor insulation

The floor of the cellar must be able to support the shelves and the stored wine. Thus, it's necessary to choose insulation with adequate compression strength.

Improve the load capacity of the insulation (particularly under the shelve legs) by using :

- **« Complex »** insulation panels covered by panels of higher load capacity.
- **Cover the insulation panel with a wooden panel** (at least 15 mm thickness), or every other appropriated material.

2.6.2. The door

Door improves the insulation. Two solutions are possible:

- **Insulate an existing door with the same insulation materials used for the walls of the cellar.** Provide a tight seal between the door frame and all sides of the door with a strip of foam rubber for example.

Use a specially design FONDIS isothermal door with polyurethane and a sealing foam

View

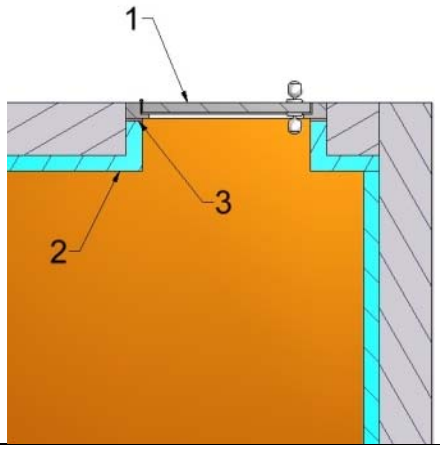

1. INSULATED DOOR
2. INSULATION
3. SEALING TAPE

2.6.3. Insulation of other elements

Avoid placing a wine cabinet or freezer who generates heat in the cellar. **The central heating pipes should be re-isolated** during their passage through the cellar.

3. INSTALLATION OF THE AIR CONDITIONER WINEMASTER®

3.1. List of required material

- A cord 4G1.5mm² for outside unit connection
- A cord 3G1.5mm² for the connection of wiring box
- Copper pipes 1/4" & 3/8" for the cooling connection
- Screws and tools for fixing the outside unit

3.2. Installation of the outside unit

3.2.1. Brackets installation

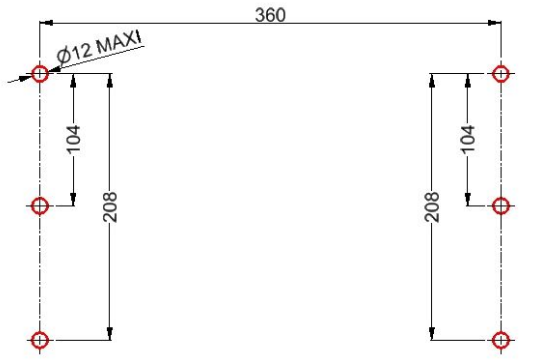

- Trace and drill the holes locations as indicated

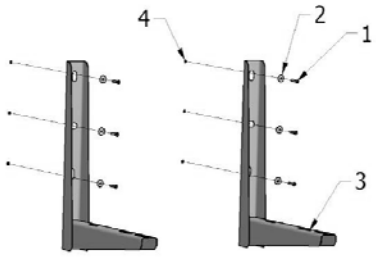

- Unfold the brackets and fix them with the adapted parts

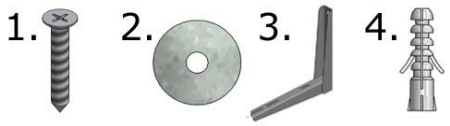

3.2.2. Fixing the outside unit

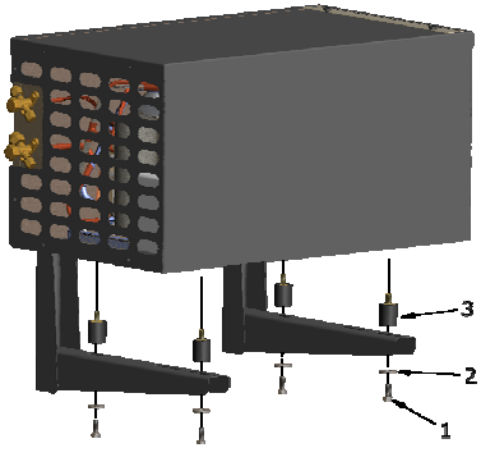

- Screw the 4 anti-vibration pins on the unit
- Place the air conditioner on the brackets
- Screw the 4 screw-washer M6 using a spanner of 10

3.3. Installation of the inside unit

Due to the diversity of installations and the type of locations, each installer must adapt to the constraints of its installation.

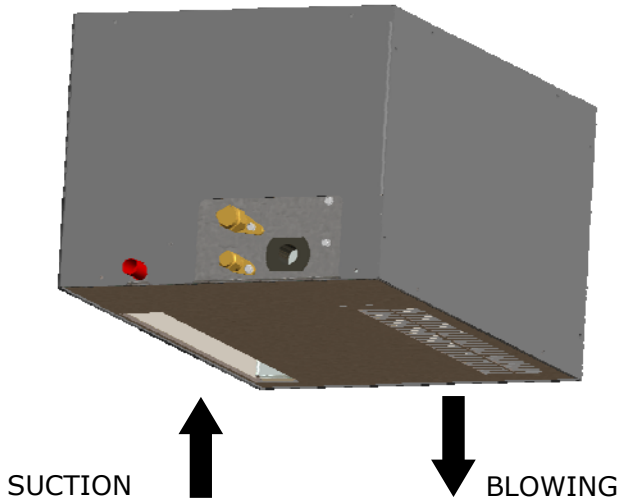

- Provide openings on the bottom for suction and blowing
- Provide space for refrigeration and electrical connections and the passage of the condensate drain
- The suction and blowing should in no way be even partially obstructed
- The blowing and suction should be separated to avoid a resumption of the air supply, even partially (for checking, the suction temperature should be the same as the room temperature when the unit produced cold)

3.4. Ducting connection

THE PIPE CONNECTION HAS TO BE UNDERTAKEN BY A PROFESSIONNAL.

Both units are loaded with an inert gas (nitrogen). Connect the 2 units by a copper line 1/4" for the liquid line and 3/8" for the gas line. The nuts are provided. Put them on the copper rigid pipe before performing the extender.
The maximum length is of 20 m, the maximum elevation is 10 meters. The number of bends per link must not exceed 10.

Lenghts	**Gas loading (R404A)**
0-5 m	900 g
5 to 10 m	1000 g
10 to 15 m	1100 g
15 to 20 m	1200 g

When all is working properly, before disconnecting the pipes, unscrew fully the valves.

Disconnect then the pipes and replace the gaps on the valves.

3.5. Electric connection

THE UNIT HAS TO BE INSTALLED RESPECTING THE NATIONAL RULES OF ELECTRIC INSTALLATIONS.

3.5.1. Connection of outside unit

- Unscrew and remove the cover from outside unit
- Unscrew the cover from the waterproof box
- Connect the box and the outside unit via the 4G1.5 cord (not supplied) as per wiring drawing (§3.5.4)
- Close the waterproof box
- Close the outside unit

3.5.2. Connection of inside unit

- Unscrew and remove the front cover
- Plug the power cord, as per wiring drawing (§3.5.4)
- Close the cover

3.5.3. Plugging

The connecting box has to be connected to a single phase power line protected by a circuit breaker 230V - 16A.

3.5.4. Wiring drawing

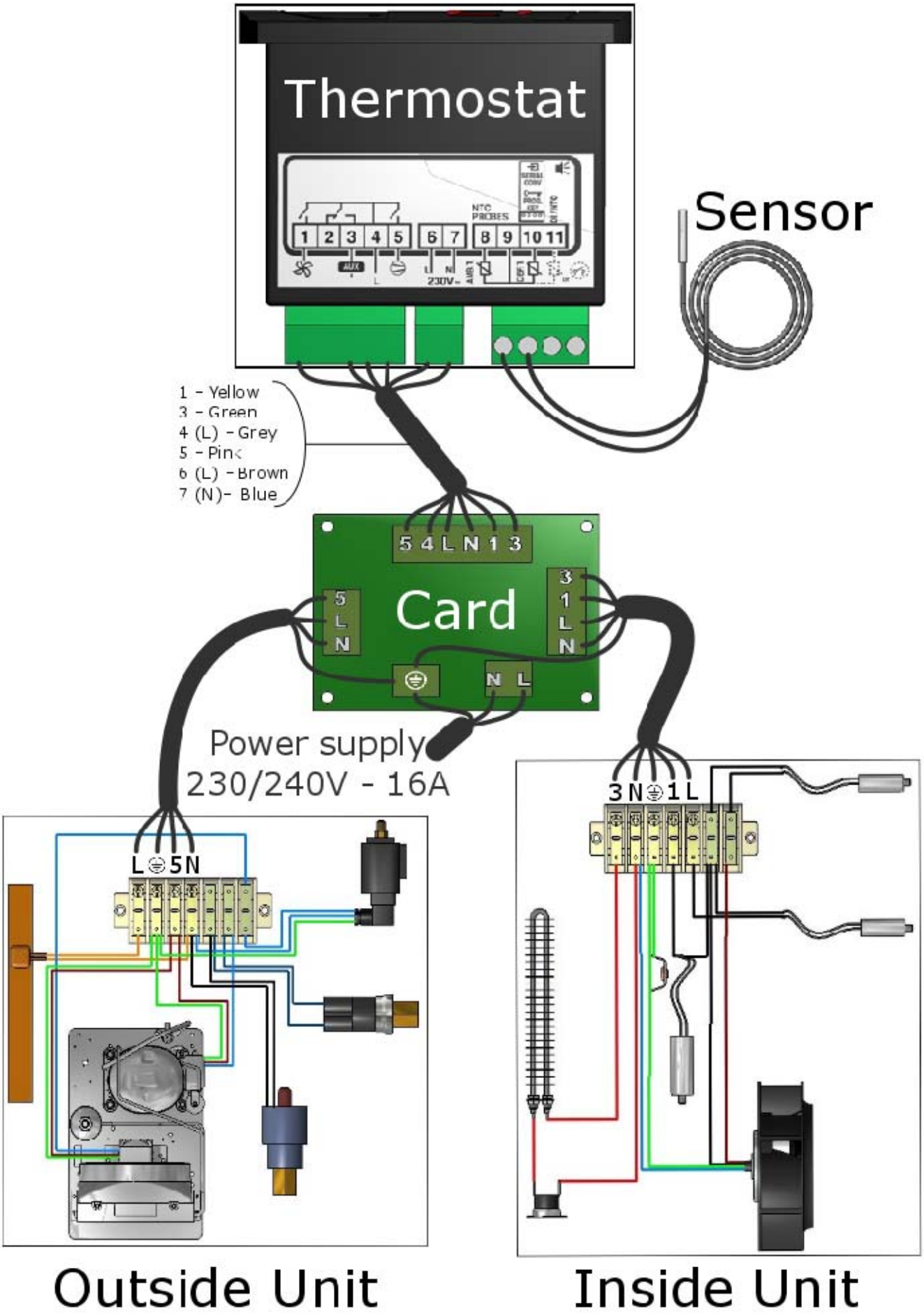

3.6. Installation of the water drain system

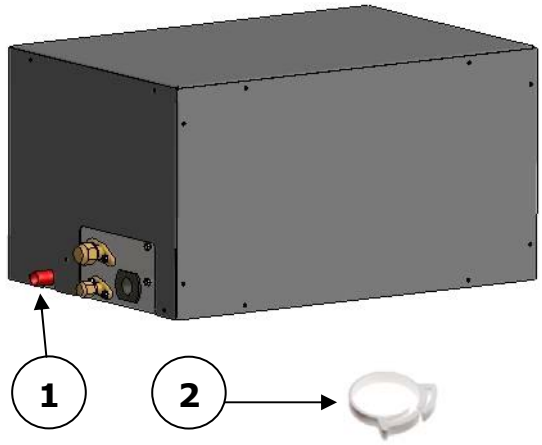

- The evacuation of the condensate is made through a drain pipe supplied with the unit
- Fit the drain pipe on the bracket (1) with a clamp (2) supplied with the unit
- The flow is done by gravity and must be connected to a sewage or bucket that must regularly be emptied

THE TUBE DRAIN SHOULD NOT BE CLOGGED OR DO LOOP UP!
The condensate bucket may overflow if the drain is not directed downwards

4. PLUGGING THE AIR CONDITIONER WINEMASTER®

The thermostat indicates the temperature in the wine cellar with a precision of 2°C. A temperature variation of the air doesn't mean the same variation of the liquid due to the thermal capacity of the liquid. The thermostat is set at 13°C in the factory. During the installation, the set temperature must be controlled and adjusted as indicated (§4.2.1).

4.1. Connecting the air conditioner

When you plug the unit to the electric socket, the display indicates the temperature of the wine cabinet :

- If the temperature is over the thermostat setting: the air conditioner starts running after 2 minutes.
- If the temperature is under the thermostat setting: the compressor doesn't start. Only the ventilator of inside unit works.

4.2. Start up

4.2.1. Temperature setting

The setting of the targeted temperature is made on the thermostat:

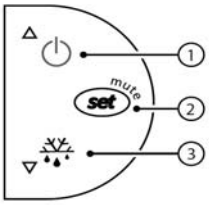

- Press on set (mute) one second until the targeted temperature is blinking.
- Use △ to increase the temperature.
- Use ▽ to lower the temperature.
- Once the right temperature is set, press on set (mute) again to confirm.

Explanations on the main display symbols: :

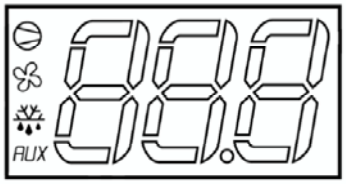

Red light = cold more engaged (compressor working)

Red light = cooling fan on high speed

Red light = defrost

Red light AUX = heating mode engaged (resistance)

4.2.2. Standby mode

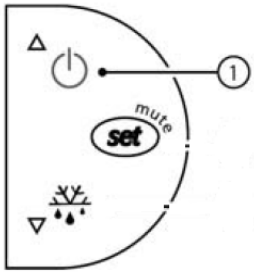

- Standby mode: maintain 3 seconds on button 1. The compressor stops and the fan turns at low speed.
- The thermostat indicates « OFF » and also the cellar temperature.
- To come back, maintain again a 3 seconds pressure on button 1.
- The thermostat indicates « ON » during 1 second
-

4.2.3. Automatic defrost

The program of the thermostat will run an automatic defrost time several times a day. During this operation, the compressor is stopped, only the fan is functioning at low speed. The condensate water produced during this period will be evacuated through the tube drain.

5. MAINTENANCE OF THE AIR CONDITIONER WINEMASTER®

5.1. Filter and outside unit cleaning

The outside unit is equipped with a washable and reusable filter.

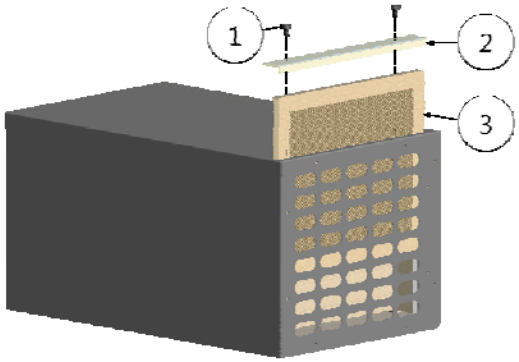

- Unscrew the 2 plastic screws (1)
- Remove the filter cover (2)
- Take the filter out (3)
- Wash the filter with warm water
- Once the filter cleaned and drained, replace the filter back and close the cover

CHECK AND CLEAN THE FILTER REGULARLY

→ DUSTED FILTER = DAMAGE ON THE AIR CONDITIONER

CHECK AND CLEAR THE OPENINGS REGULARLY

→ CLOGGED AIR INLET = DAMAGED AIR CONDITIONER

5.2. Condensates drain

Check and clean the drain once a year.

6. WARRANTY

6.1. Legal warranty

The contractual warranty is not exclusive, earnings for the benefit of the purchaser profit of the legal warranty against defects or hidden defects that applies under the conditions of article 1641 and following from the civil code.

6.2. 2 years contractual warranty

FONDIS offers a **2 years warranty** against any manufactured defect.

During this period of contractual warranty, FONDIS will replace any acknowledge defective part.

In case of electric failure, FONDIS reserves the right to check the appliance before replacing any defective parts.
In case of refrigeration failure, FONDIS may require that the appliance is returned to the factory for repair. Any interventions will take place according to the guidelines set in the 'after sale service document'.

Interventions and returns can only be done after written agreement from FONDIS after sale service.

6.3. Warranty conditions

The contractual warranty applies to all appliance installed and used in conformity with this «user manual ». His application is conditioned by the presentation of the purchase invoice or for lack of its copy.

6.4. Exclusions and limitations of warranty

The warranty can be refused in following cases:

- Insulation of the cellar or installation of the appliance not in compliance with the instructions of this guide.

- Damages due to negligence, lack of maintenance or incorrect use of the air conditioner WINEMASTER® (particularly clogged filters.

- Exchange of parts or repair under warranty will not extend the 2 years warranty period.

FONDIS SAS cannot, in any case, be held liable for any direct or indirect damages resulting from the failure of the air conditioner. **The warranty is exclusively limited to the product itself.**

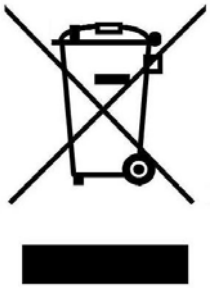

The European Community is attaching a great importance to the environment and the waste process, set up by a instruction N° 2002/96/CE relating to the electric and electronic component waste (DEEE).

In accordance with this standard, the logo « crossed dustbin » is obligatory.

This logo means that the appliance may not under any circumstances be thrown in the household garbage. It must be handed over to the appropriate collection point for its treatment, recovery and recycling of wasted electric and electronic components.

Acting like that, you make a gesture for the environment and contribute to the safeguard of the natural resources as well as to the protection of human health.

VINO MASTER

WINE STORAGE SOLUTIONS

Vino Master Division of Elextric
Kemp House 152-160 City Road,
London, EC1V 2NX
Tel: 020 32868525
E-mail: info@vinomaster.co.uk
www.vinomaster.co.uk

We reserve the right to change product specifications and prices without prior notice. Vino Master Division of Elextric does not accept any responsibility for any loss, which may arise as a consequence of reliance on information contained in this user guide